COMPONENT SPECIFICATION

SERIES NAME	Interference Suppression Capacitors Class X2 (UL and ENEC Approved)
SERIES CODE	207

GIVEN BY: DEKI ELECTRONICS LTD

DEKI ELECTRONICS LTD
B-20, SECTOR-58, NOIDA 201301
Tel: +91 120 2585457/58 • Fax: +91 120 2585289 • Email: info@dekielectronics.com

Item Code Description

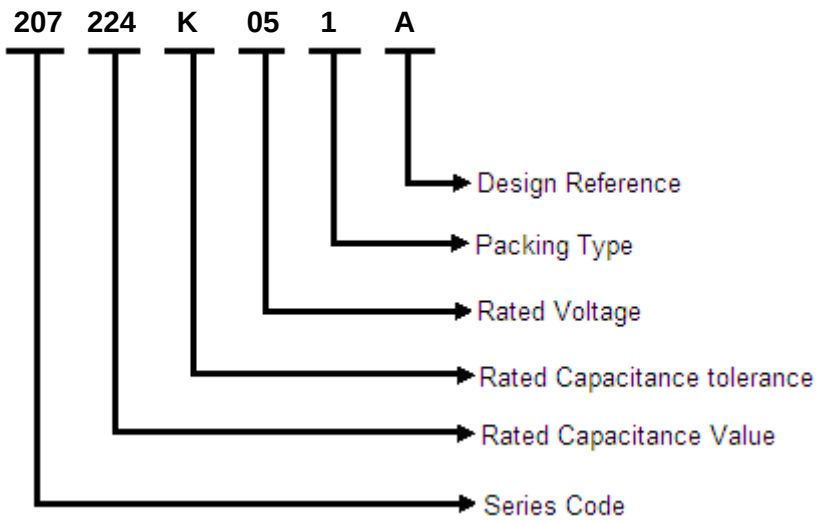

Rated Capacitance

Three-digit (224) indicate rated capacitance in Pico Farad (First two digits indicate value & third digit indicates number of zeroes to be suffixed to first two digits).
For example:

103	$= 10 \times 10^3$	=	10000 pF	=	10 nF	=0.01 µF
104	$= 10 \times 10^4$	=	100000 pF	=	100 nF	=0.1 µF
105	$= 10 \times 10^5$	=	1000000 pF	=	1000 nF	=1 µF
106	$= 10 \times 10^6$	=	10000000 pF	=	10000 nF	=10 µF

Capacitance Tolerance

F = ±1%, G = ±2%, H = ±2.5%, I = ±3.5%, J = ±5%, K = ±10%, L = ±15%, M = ±20%, N=±40%

Rated Voltage

One digit and one letter (2J) or two digits (05) indicate rated voltage

Rated Voltage Codification

For DC Rated Voltage													
A		B		C		D		E		F		G	
1A	10	1B	12.5	1C	16	1D	20	1E	25	1F	30	1G	40
2A	100	2B	125	2C	160	2D	200	2E	250	2F	300	2G	400
3A	1000	3B	1250	3C	1600	3D	2000	3E	2500	3F	3000	3G	4000
H		I		J		K		L		M		N	
1H	50	1I	45	1J	63	1K	70	1L	80	1M	85	1N	90
2H	500	2I	450	2J	630	2K	700	2L	800	2M	850	2N	900
3H	5000	3I	4500	3J	6300	3K	7000	3L	8000	3M	8500	3N	9000
O		P		Q		R		S		T		U	
1O	110	1P	120	1Q	57.5	1R	15	1S	17	1T	70	1U	130
2O	1100	2P	1200	2Q	575	2R	150	2S	170	2T	700	2U	1300
3O	11000	3P	12000	3Q	5750	3R	1500	3S	1700	3T	70000	3U	13000

For AC Rated Voltage													
01	02	03	04	05	06	07	08	09	10	11	12	13	14
190 VAC	250 VAC	275 VAC	305 VAC	310 VAC	440 VAC	500 VAC	600 VAC	700 VAC	63 VAC	230 VAC	330 VAC	400 VAC	450 VAC

Packing Type

1: Bulk packing (original pitch)
2: Bulk packing (after forming & cutting)
3: Ammo packing (after forming & taping)
4: Bulk packing (after forming in original pitch without cut)
5: Bulk packing (after formed & without cut)
6: Ammo packing (Straight lead)
7: Bulk packing (Straight lead cut)
8: Reel packing (Straight lead)

Reference Data

Capacitance	0.01µF to 10µF
Capacitance tolerance	±5%, ±10% and ±20%
Rated AC voltage at 50/60 Hz	310Vac
Climatic testing class according to IEC 60068-1	40/110/56/B
Maximum application temperature	110°C
Rated temperature	85°C
Reference standards	IEC 60384-14
Dielectric	Polypropylene
Electrodes	Metallized
Construction	Mono
Encapsulation	Incased in flame retardant box filled with resin
Leads	Tinned wire
Marking on capacitor body	Type of capacitor, rated capacitance, rated tolerance, rated voltage and climatic category will be available on each and every capacitor. Example → IS/MKP X2 D 104 K 310 VAC 40/110/56/B

*This series is designed to use in "Across the line" applications.

Approval	Symbol	Capacitor Class	Rated Voltage	Capacitance	Certificate Number
UL 60384-14	c UL us	X2	310 Vac	0.01 µF ~ 10 µF	E519274
EN 60384-14	EN EC 16	X2	310 Vac	0.01 µF ~ 10 µF	2017076

Dimensions Description

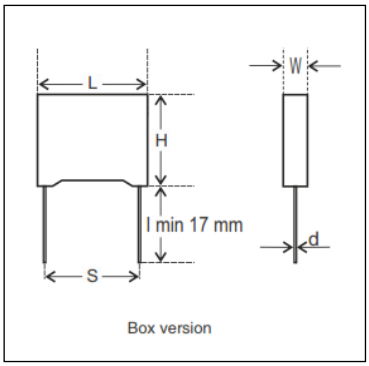

Interference Suppression Capacitors

Class X2 (UL and ENEC Approved) • Series Code 207

Rated Capacitance (μF)	Dimensions (mm) L (±0.5)	H (±0.5)	W (±0.5)	S	d (±0.05)	l	dV/dt (V/μs)	Item Code
0.01	13	11	5	10±0.75	0.6	17 Min.	475	207 103 K 05 1 A
0.01	13	11	5	10±0.5	0.6	5±0.5	475	207 103 K 05 7 A
0.022	13	11	5	10±0.75	0.6	17 Min.	475	207 223 K 05 1 A
0.022	18	10	5	15±0.75	0.8	17 Min.	340	207 223 K 05 1 B
0.022	10.5	11	5	10±0.75	0.6	17 Min.	600	207 223 K 05 1 C
0.033	10.5	12	6	7.5±0.5	0.6	17 Min.	600	207 333 K 05 1 B
0.033	10.5	12	6	7.5±0.5	0.6	17 Min.	600	207 333 K 05 6 B
0.033	13	11	5	10±0.75	0.6	17 Min.	475	207 333 K 05 1 A
0.033	13	11	5	10±0.75	0.6	17 Min.	475	207 333 M 05 1 A
0.047	10.5	12	6	7.5±0.75	0.6	17 Min.	475	207 473 K 05 1 D
0.047	13	12	6	10±0.75	0.6	17 Min.	475	207 473 K 05 1 B
0.047	13	12	6	10±0.75	0.6	17 Min.	475	207 473 M 05 1 B
0.047	18	11	5	15±0.75	0.8	17 Min.	340	207 473 K 05 1 A
0.068	13	12	6	10±0.75	0.6	17 Min.	475	207 683 K 05 1 C
0.068	18	12	6	15±0.75	0.8	17 Min.	340	207 683 K 05 1 B
0.082	18	12	6	15±0.75	0.8	17 Min.	340	207 823 K 05 1 A
0.1	13	12	6	10±0.75	0.6	17 Min.	475	207 104 K 05 1 L
0.1	13	12	6	10±0.5	0.6	5±0.5	475	207 104 K 05 7 L
0.1	13	12	6	10±0.75	0.6	17 Min.	475	207 104 K 05 1 D
0.1	18	11	5	15±0.75	0.8	17 Min.	340	207 104 K 05 1 C
0.1	18	12	6	15±0.75	0.8	17 Min.	340	207 104 K 05 1 A
0.1	18	12	6	15±0.5	0.8	5±0.5	340	207 104 K 05 7 A
0.1	18	12	6	15±0.75	0.8	17 Min.	340	207 104 M 05 1 A
0.15	13	12	7	10±0.75	0.6	17 Min.	475	207 154 K 05 1 C
0.15	13	12	7	10±0.75	0.6	17 Min.	475	207 154 K 05 1 C
0.15	13	14	8	10±0.75	0.6	17 Min.	475	207 154 K 05 1 B
0.15	18	12	6	15±0.75	0.8	17 Min.	340	207 154 K 05 1 D
0.15	18	13.5	7.5	15±0.75	0.8	17 Min.	340	207 154 K 05 1 A
0.18	18	13.5	7.5	15±0.75	0.8	17 Min.	340	207 184 K 05 1 A
0.18	18	14.5	8.5	15±0.75	0.8	17 Min.	340	207 184 K 05 1 B
0.22	13	14	8	10±0.75	0.6	17 Min.	475	207 224 K 05 1 C
0.22	13	14	8	10±0.5	0.6	5±0.5	475	207 224 K 05 7 C
0.22	18	13.5	7.5	15±0.75	0.8	17 Min.	340	207 224 K 05 1 D
0.22	18	14.5	8.5	15±0.75	0.8	17 Min.	340	207 224 K 05 1 B
0.22	18	14.5	8.5	15±0.75	0.8	17 Min.	340	207 224 M 05 1 B
0.22	18	14.5	8.5	15±0.75	0.8	17 Min.	340	207 224 K 05 1 B
0.22	26.5	16	7	22.5±1.0	0.8	17 Min.	150	207 224 K 05 1 A
0.33	18	14.5	8.5	15±0.75	0.8	17 Min.	340	207 334 K 05 1 B
0.33	18	14.5	8.5	15±0.5	0.8	7±0.5	340	207 334 K 05 7 B
0.33	26.5	16	7	22.5±1.0	0.8	17 Min.	150	207 334 K 05 1 D
0.33	26.5	17	8.5	22.5±1.0	0.8	17 Min.	150	207 334 K 05 1 A

Rated Capacitance (μF)	Dimensions (mm) L (±0.5)	H (±0.5)	W (±0.5)	S	d (±0.05)	l	dV/dt (V/μs)	Item Code
0.47	18	16	10	15±0.75	0.8	17 Min.	340	207 474 K 05 1 B
0.47	18	19	11	15±0.75	0.8	17 Min.	340	207 474 K 05 1 F
0.47	26.5	17	8.5	22.5±1.0	0.8	17 Min.	150	207 474 K 05 1 A
0.47	32	18	9	27.5±1.0	0.8	17 Min.	100	207 474 K 05 1 C
0.68	18	16	10	15±0.75	0.8	17 Min.	340	207 684 K 05 1 B
0.68	18	19	11	15±0.75	0.8	17 Min.	340	207 684 K 05 1 D
0.68	26.5	17	8.5	22.5±1.0	0.8	17 Min.	150	207 684 K 05 1 A
0.68	26.5	18.5	10	22.5±1.0	0.8	17 Min.	150	207 684 K 05 1 E
0.68	32	20	11	27.5±1.0	0.8	17 Min.	100	207 684 K 05 1 C
1	26.5	20	11	22.5±1.0	0.8	17 Min.	150	207 105 K 05 1 D
1	26.5	22	12	22.5±1.0	0.8	17 Min.	150	207 105 K 05 1 A
1	32	18	9	27.5±1.0	0.8	17 Min.	100	207 105 K 05 1 B
1	32	22	13	27.5±1.0	0.8	17 Min.	100	207 105 K 05 1 C
1	32	20	11	27.5±1.0	0.8	17 Min.	100	207 105 K 05 1 H
1.5	26.5	22	12	22.5±1.0	0.8	17 Min.	150	207 155 K 05 1 A
1.5	32	23	13	27.5±1.0	0.8	17 Min.	100	207 155 K 05 1 B
2.2	26.5	26	15.5	22.5±1.0	0.8	17 Min.	150	207 225 K 05 1 A
2.2	32	28	14	27.5±1.0	0.8	17 Min.	100	207 225 K 05 1 B
4.7	32	37	22	27.5±1.0	0.8	17 Min.	100	207 475 K 05 1 A
10	42	44	24	37.5±1.0	1	17 Min.	80	207 106 K 05 1 A

Specific Data

Description	Value	
Maximum tangent of loss angle(Tanδ)	0.001 at 1 kHz	
Voltage proof test between leads	4.3 times of the rated voltage value DC for 2 second	
Voltage proof test between leads and case	2 times of rated voltage+1500VAC with a minimum 2000 VAC for 2 second	
Insulation Resistance (R_{IS})	C_R≤0.33 μF	C_R>0.33 μF
(or) time constant T= C_R × R_{IS}	≥15000 MΩ	≥5000 s
at 25° C, relative humidity ≤70%		

Endurance Test

Loaded at 1.25 times of rated voltage at 110˚C for 1000 hours with once per hour voltage increased to 1000Vrms for 0.1 second. These voltages shall be applied to each capacitor individually through a resistor of 47Ω ± 5%.

After The Test

ΔC/C : ≤ 10% of initial value.
Increase of Tan δ : ≤ 0.008 at 10 kHz for C_R ≤1.0μF; ≤ 0.005 at 1 kHz for C_R >1.0μF;
Insulation Resistance : ≥ 50% of the value mentioned in specific data.

Storage Conditions

Avoid storing the capacitors in places where the environmental conditions differ from the following:
Storage time: ≤ 24 months from the date marked on the label glued to the package.

- Temperature: -40 to 80°C
- Humidity:

- Average per year:	≤70%
- For 30 full days randomly distributed throughout the year:	≤85%
- Dew:	absent

After a longer period of storage or use, the tolerance can increase; but, according to standard specification, it may never exceed twice the value measured at the time of delivery.

Disclaimer

All our capacitors are designed, manufactured and tested to specifications. We strictly adhere to standards in procurement of materials, in the laid down manufacturing processes and consistently apply stringent process controls and testing parameters. This ensures that our capacitors always perform to the offered specifications.

Appropriateness of use in a specific circuit and fitness to a particular application however needs to be verified and its reliability through expected lifetime is required to be validated by the customer. Deki's responsibility is limited to ensuring that the capacitor performs as claimed in the specification/ data sheets provided by Deki. Deki specifically disclaims any implied warranties of fitness for any particular purpose. Liability, in any case is limited to the price paid for the capacitors.